BOBCAT2.0 B2041

IMPERX: Technically superior products, full tech support, rapid-response customer care. "Bobcat 2.0" adds many new features, lens control, more memory and enhanced image quality. Each easy to use Bobcat is supported by IMPERX professionals..

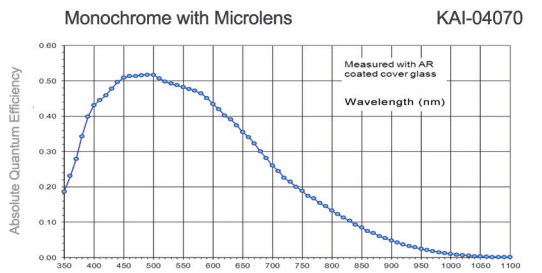

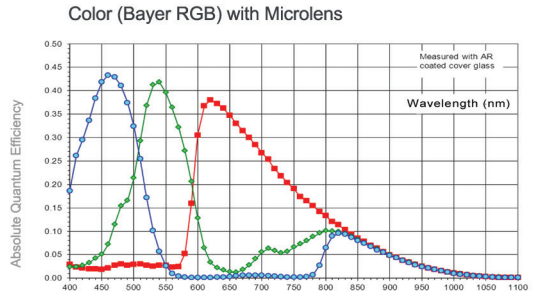

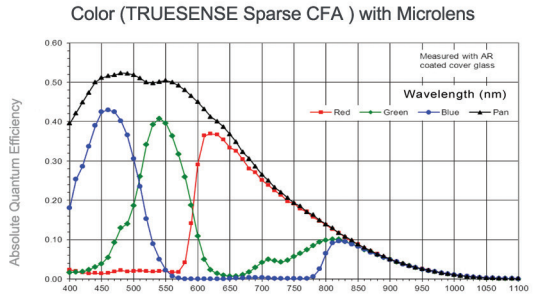

INTERFACES AVAILABLE:	Camera Link® Base or Medium, CoaXPress
Resolution	2048 x 2048 (std.), 2072 x 2072 (max.)
Sensor	KAI-04070, CCD
Sensor Format	15.2mm (H) x 15.2mm (V) 21.4mm diagonal, 4/3"optical format
Pixel Size	7.4 µm
Frame Rate Standard Clock	40 MHz / 26 fps
Frame Rate Overclocked	50 MHz / 34 fps
Maximum Frame Rate	92 fps
Minimum S/N Ratio	60dB
Output Format	Mono CCD: 8, 10, 12 Color CCD: 8, 10, 12 TRUESENSE Sparse CFA
Analog Gain Control	Manual, Auto: 0 - 36dB 1024 steps
Black Level Control	Manual, 1024 steps
Digital Gain and Offset	Manual
RGB Gain and Offset	Manual
White Balance	Manual, auto, off
Shutter Speed	1us/step, 1/500,000 to 1/32 sec (nom)
Exposure Control	Manual, auto, external
Long Integration	Up to 16 seconds
Regions of Interest (ROI)	7 ROIs, any line to any line, any pixel to any pixel
Binning H/V	1x, 2x, 3x, 4x, 8x (Independent for H & V)
Trigger Inputs	External (TTL via IN1/IN2), pulse generator, software, computer
Trigger Options	Level, edge, pulse width, internal exposure, up to 16 seconds trigger delay, debounce
Trigger Modes	Free-run, standard, double, fast, asynchronous, frame accumulation
Double Trigger (PIV) Interframe	Time: 200 nanoseconds
External Inputs/Outputs	2 IN, 2 OUT, user programmable
Strobe Output	2 strobes, programmable position and duration
RS232 Interface	Yes, programmable
Pulse Generator	Yes, programmable
Image Overlay	Optical center, programmable H & V lines
Image Enhancement	Threshold, contrast enhancement, knee correction, horizontal flip, negative image, bit shift (+/- 7 places)
Internal DDR Memory	2Gb (256 MB)
Gamma Correction	G=1.0, G=0.45, user upgradeable LUT
Data Corrections	Defective/hot pixel correction (static, dynamic), FFC, black level, vertical smear
Minimum Illumination	1 Lux, F/ 1.4
Lens Mount	F-Mount (Default), C, M42, EOS, Rodenstock, Custom OEM
Iris, Zoom Focus Control	Manual, user programmable (motorized lens, custom)
Supply Input Range	12VDC (10V - 15V), 1.5 A inrush
Power Consumption	CLM 5.6 W, CXP TBD
Size – Width/Height	60mm (W) x 60mm (H) – Applies to all interfaces
Size – Length	CLM 53.1mm (L), CXP -TBD
Weight	CLM 352g, CXP -TBD
Vibration, Shock	100g (20-200) HZ XYZ, 1000g
Environmental	-40°C to +85°C Operating, -50°C to +90°C Storage
Humidity	10% to 90% non-condensing
MTBF	>660,000 hours @ 40°C
Regulatory	FCC 15 part A, CE, RoHS

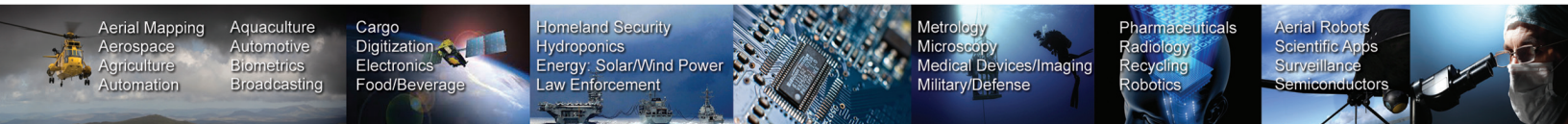

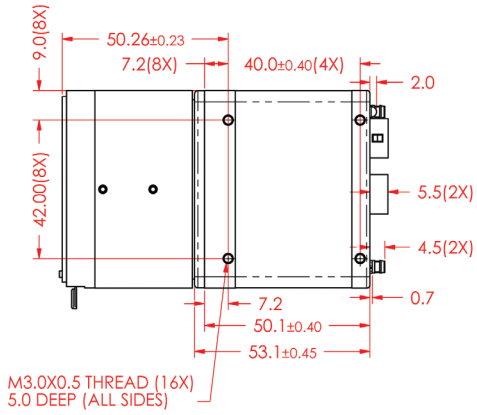

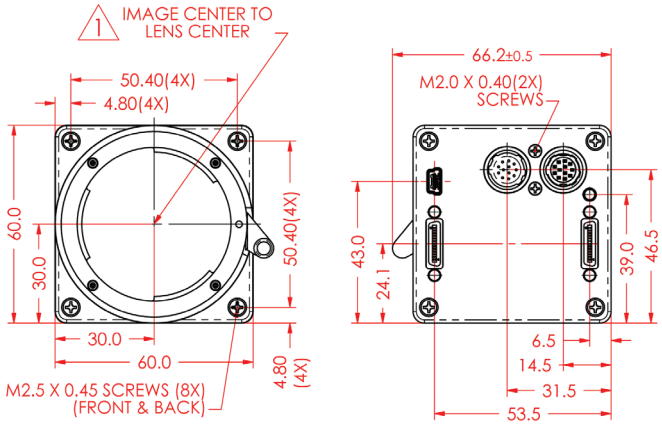

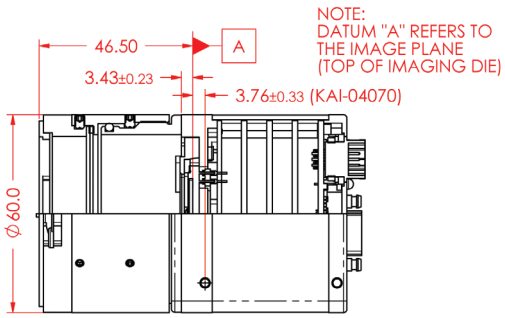

Hirose Connectors

Power and I/O Interface

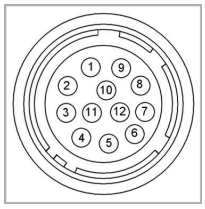

1	12V DC Return *	7	OUT1 Signal
2	+12V DC*	8	IN1 Signal
3	IRIS VCC	9	IN2 Signal
4	IRIS Video	10	IN1/2 Return
5	IRIS Return	11	Reserved
6	OUT1/2 Return	12	OUT2 Signal

Connector: Hirose HR 10A- 10R- 12PB(71)

*Not connected for CXP

Lens Control/RS232

See manual for PIN information

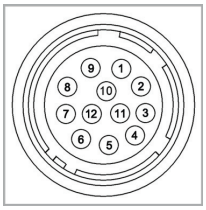

1	IRIS Return	7	FOCUS +
2	IRIS VCC	8	ZOOM -
3	IRIS Video	9	ZOOM +
4	IRIS -	10	UART_COM
5	IRIS +	11	UART_RX
6	FOCUS -	12	UART_TX

Connector: Hirose HR 10A- 10R- 12SB(71)

* Canon EOS control available

B2041 **Ordering Information**

Interfaces available

Camera Link® Medium (CLM)
CoaXPress (CXP)

Sensor types available

Monochrome
Bayer Color
TRUESENSE Sparse CFA

Accessories (Sold separately)

PS12v04-Power Supply w/ 1 input and 1 output
PS12v05-Power Supply (as above) and Video Iris

IMPERX
WWW.IMPERX.COM

bobcat-B2041-v2,Rev1

INFORMATION IS SUBJECT TO CHANGE WITHOUT NOTIFICATION. COPYRIGHT 2013