CHEETAH

RUGGEDIZED CAMERA SERIES

Front View | Rear View

C4181
CMOS 16 MP
Camera Link®

Imperx: *C4181*

The C4181 incorporates the On Semiconductor Python NOIP1XX016KA CMOS image sensor with a native resolution of 4096 x 4096 in an APS-H optical format delivering up to 50 frames per second in global shutter mode with a Camera Link® Deca, PoCL output. CMOS technology eliminates smear columns from areas of ultra-bright intensity and specular reflections in uncontrolled lighting applications. The Imperx Cheetah line provides excellent image quality with Imperx proprietary processing. However, Imperx puts you in control and gives you full access to raw data without corrections. By using the simple intuitive Graphical User Interface, you can quickly apply or remove image corrections. The C4181's flexibility and image quality make it suitable for a broad range of diverse and demanding applications, but "one size doesn't fit all," and Imperx can help optimize the camera to your exacting requirements.

Specifications

Feature	Description
Output Interface	Camera Link® Base, Full/Deca (CLF) w/PoCL
Resolution	4096 (H) x 4096 (V)
Sensor	Python NOIP1XX016KA, CMOS Color/Mono/ENIR
Sensor Format	18.4 mm (H) x 18.4 mm (V), 26 mm diagonal, APS-H optical format
Pixel Size	4.5 microns square
NIR Sensitivity	Mono: 850 nm: 18%, 950 nm: 6% ENIR: 850 nm: 30%, 950 nm: 11%
Shutter	Global shutter (GS)
Fixed Pattern Noise	<0.9 LSB
Sensor Digitization	10-bit
Frame Rate	50 fps (8-bit), 40 (10-bit)
Camera Link Clock Rate	85 MHz
Dynamic Range	59 dB
Row Overhead Time (ROT)	Zero
Output Bit Depth	8, 10-bit
Analog Gain Control	1x, 1.26x, 1.87x, 3.17x
Digital Gain	1x (0 dB) to 15.9 (24 dB) with a precision of 0.001x, Auto
AEC/AGC	Yes
Black Level Offset	Manual (-512…+511), Auto
White Balance	Manual, Auto, Off
Shutter Speed	1 µs/step, 40 µs to 1.0 s
Exposure Control	Off, Internal, External, Auto
Regions of Interest (ROI)	1 ROI
Averaging Decimation	1 x 2, 2 x 1, 2 x 2
Sub-sampling Decimation	1 x 2, 2 x 1, 2 x 2
Trigger Inputs	External, Pulse generator, Software, Computer
Trigger Options	Edge, Debounce
Trigger Modes	Internal, External, Computer
External Inputs/Outputs	2 IN (OPTO, LVTTL) / 2 OUT (OPTO, TTL)

Feature	Description
Strobe Output	2 strobes, programmable position and duration
Pulse Generator	Yes, programmable
Data Correction	2 LUTs pre-programmed with Gamma 0.45 Defective/hot pixel correction (static, dynamic), Flat field correction, Fixed pattern noise correction
Lens Mount	F-Mount (Default), M42, EF Canon (passive)
Supply Voltage Range	12 V DC (5 V – 33 V) 1.5 A inrush
Camera Current	Typical: 0.52 A, Maximum: 0.66 A
PoCL	PoCL capable in Medium/Full mode
Size - Width/Height/Length	72.0 mm (W) x 72.0 mm (H) x 33.8 mm (L)
Weight	379 g
Vibration, Shock	Complies with IEC60068-2-64 and IEC60068-2-27
Environmental	-40 °C to +85 °C Operating -50 °C to +90 °C Storage
Humidity	10% to 90% non-condensing
MTBF	>323,000 hours @ 40 °C (Telcordia SR-332 Method 1)
Military Standard	MIL-STD-810G
Regulatory	FCC Part 15 Class A, CE, RoHS

IMPERX
Industrial Cameras & Imaging Systems

Imperx: *C4181 Applications*

The CLF-C4181 incorporates a number of unique features tailored to reduce system complexity, maximize interface bandwidth, and expand the usable operational range.

Aerospace ● Satellites ● Surveillance ● Military and Non-Military Ground Vehicles ● Ball Grid Array ● Printed Circuit Board Inspection ● Motion Analysis ● Broadcast Television ● Telepresence ● Unmanned Aerial Vehicles ● Machine Vision ● Reconnaissance ● Intelligent Traffic Systems ● Aerial Imaging ● Open Road Tolling Systems ● Situational Awareness

Absolute Quantum Efficiency

Mono & Color Spectral Response NOIP1xx16KA

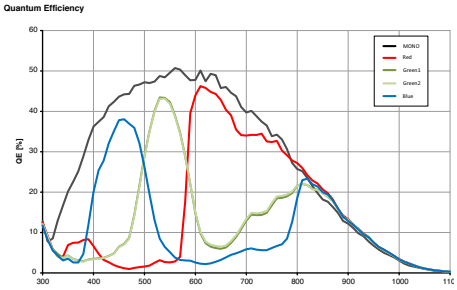

Mono & ENIR Spectral Response NOIP1xx16KA

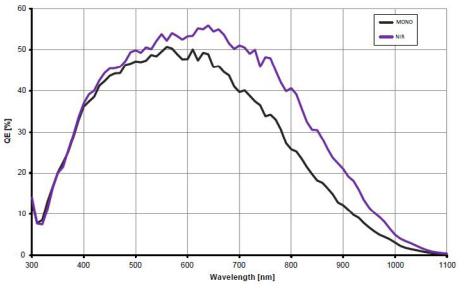

Dimensions

FRONT

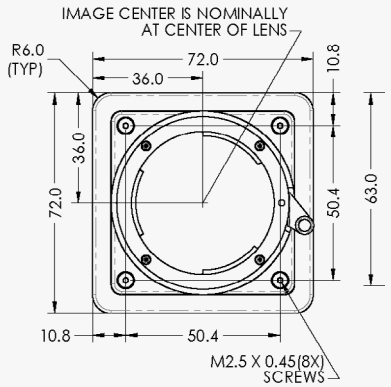

BACK

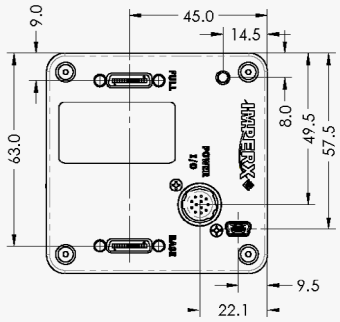

TOP

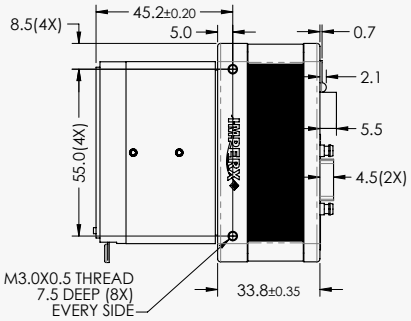

Ordering Information

Output Interface

Camera Link® Full (CLF) w/PoCL®

Sensor Types available

Monochrome
Bayer Color
NIR

Lens Mounts

F Mount (Default)
M42
EF Canon (Passive)

Accessories (Sold separately)

PS12V04A-Power Supply w/ 1 input and 1 output

Software/Drivers/Interface

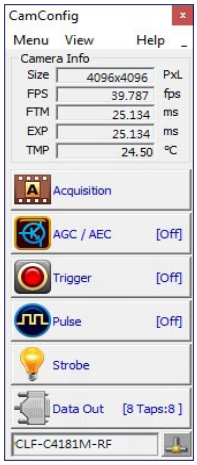

Hirose Connectors

Power and I/O Interface

1. 12V DC Return
2. +12V DC
3. Reserved
4. Reserved
5. OUT2 OPTO -
6. OUT1 TTL Gnd
7. OUT1 TTL Signal
8. IN1 OPTO +
9. IN2 TTL Signal
10. IN1 OPTO -
11. IN2 TTL Gnd
12. OUT2 OPTO +

Connector: Hirose HR 10A-10R-12PB(71)

Rev: cl_c4181_r2_2020

Quality Management System ISO 9001:2015 Registered
Environmental Management System ISO 14001:2015 Registered
DDTC Registered (Directorate of Defense Trade Controls, US Department of State)

Industrial Cameras & Imaging Systems

IMPERX 6421 Congress Ave., Boca Raton, FL 33487, USA
Tel: +1-561-989-0006. Email: sales@imperx.com

WWW.IMPERX.COM

Technical data has been fully checked, but accuracy of printed matter is not guaranteed. Subject to change without notice. Copyright 2020.